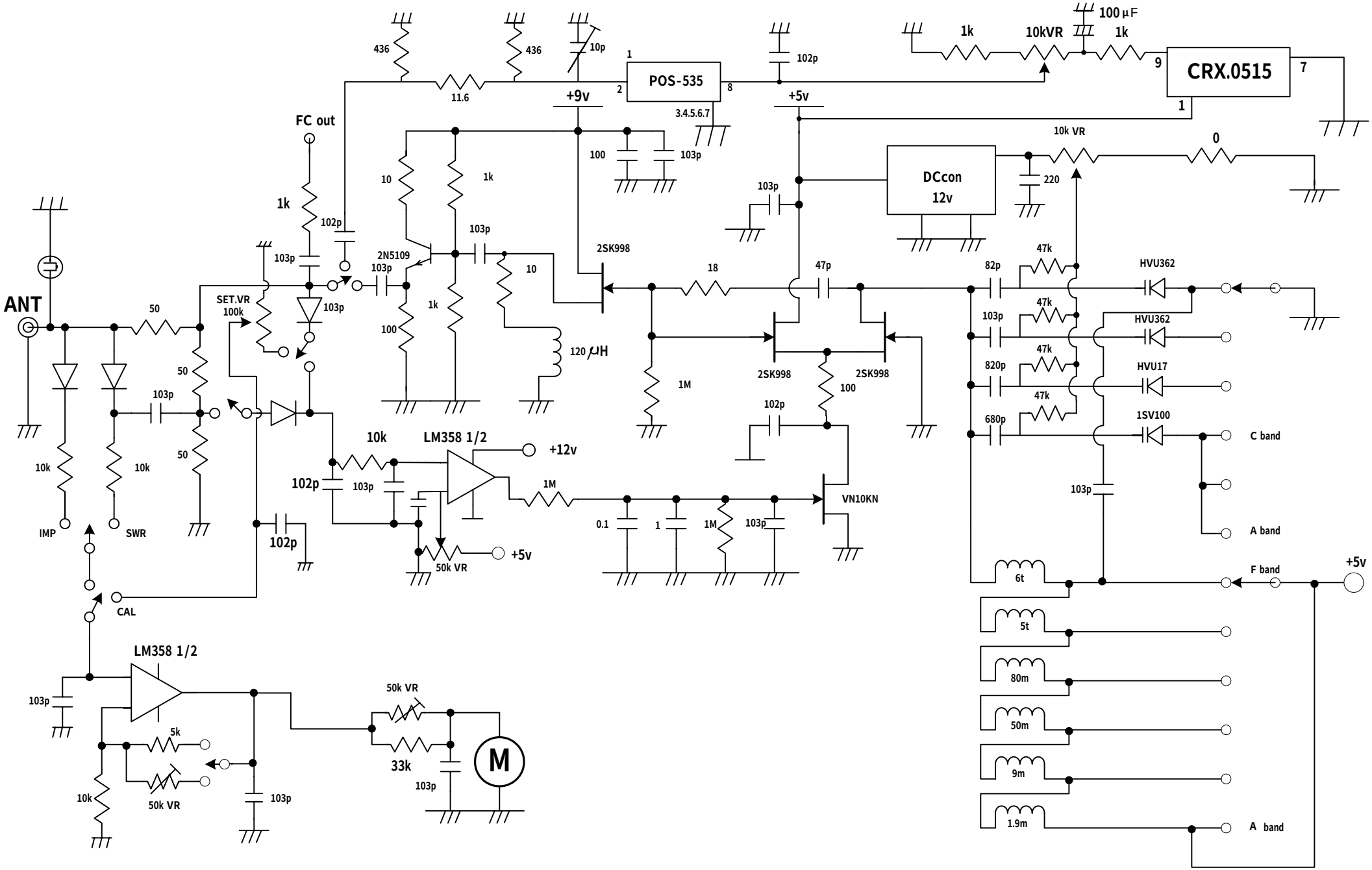
ANT
IMP
SWR
CAL
FC out
SET.VR
100k
50
50
50
10k
10k
10k
103p
102p
1k
436
436
11.6
10p
POS-535
+9v
3.4.5.6.7
102p
+5v
1k
10kVR
100 μF
1k
CRX.0515
100
103p
10
1k
2N5109
103p
103p
1k
100
10
120 μH
2SK998
18
47p
1M
2SK998
2SK998
100
102p
DCcon
12v
103p
10k VR
220
0
82p
47k
HVU362
103p
47k
HVU362
820p
47k
HVU17
680p
47k
1SV100
C band
A band
F band
+5v
103p
10k
LM358 1/2
+12v
102p
103p
1M
VN10KN
0.1
1
1M
103p
50k VR
+5v
102p
6t
5t
80m
50m
9m
1.9m
A band
LM358 1/2
103p
5k
50k VR
10k
103p
50k VR
33k
103p
M